Receiver & Decoder Module

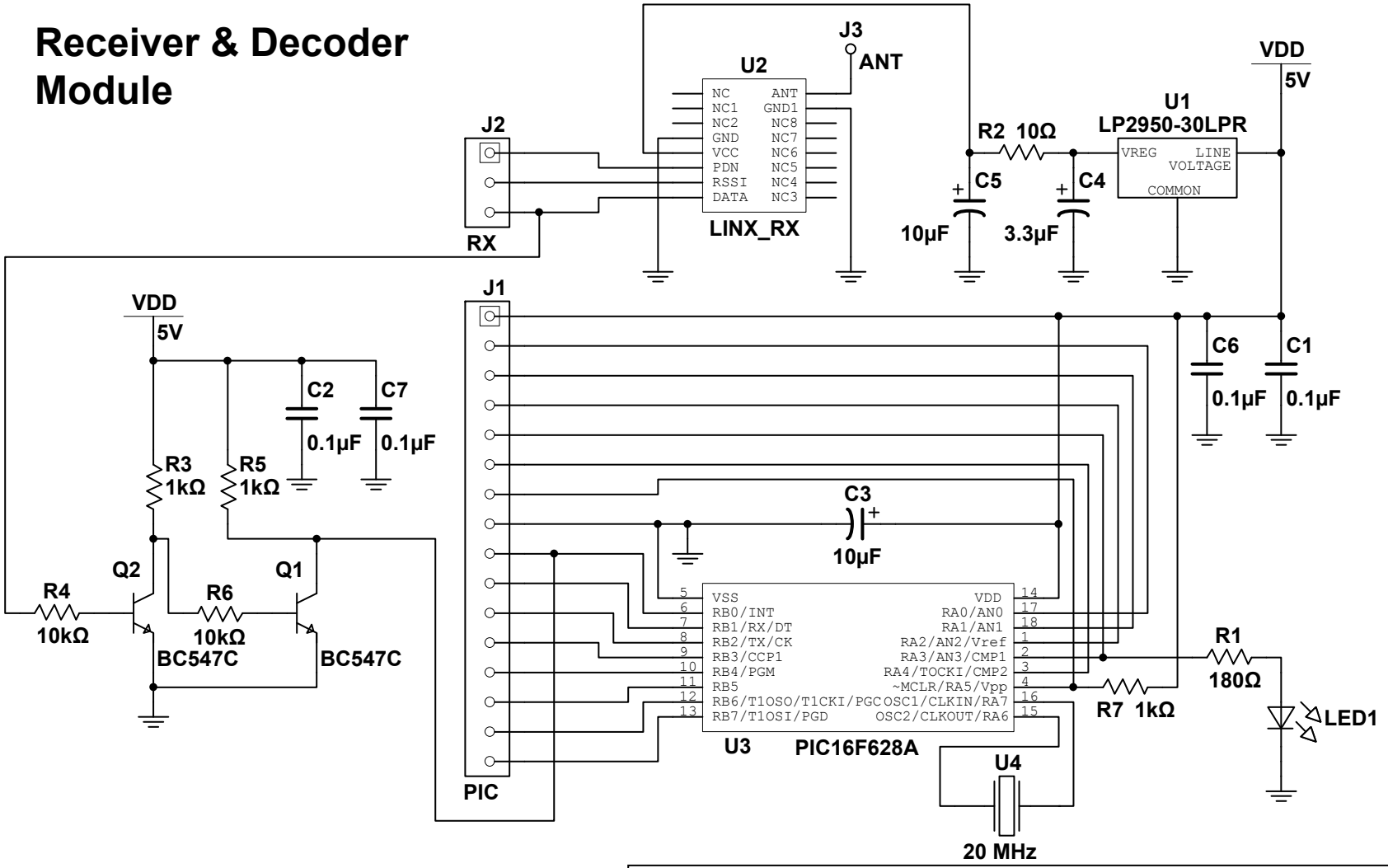

Title: LINX RX_PIC		
RF Receiver and Decoder Module		
Designed by: M. Maggi	Document N: 0001	Revision: 1.0
Checked by: M. Maggi	Date: 2011-09-17	Size: A
Approved by: M. Maggi	Sheet 1 of 1	